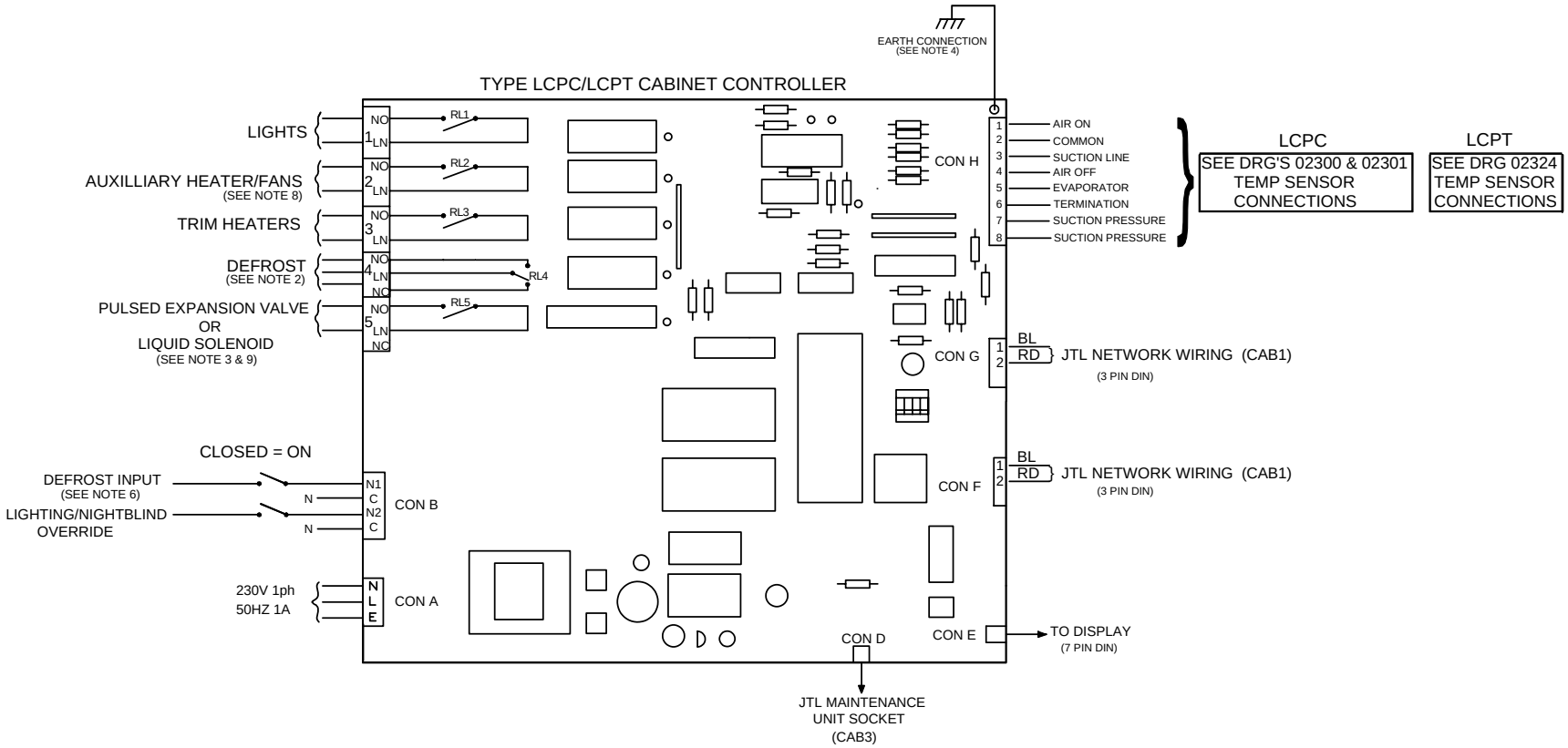

NOTES:

1. TO ENSURE THAT INTERNALLY FITTED SUPPRESSORS WORK CORRECTLY:- ENSURE THAT LINE VOLTAGE IS CONNECTED TO TERMINALS MARKED `LN' AND EACH LOAD IS CONNECTED TO TERMINALS MARKED `NO' OR `NC'.
2. THE DEFROST OUTPUT HAS CHANGEOVER CONTACTS. SELECT THE APPROPRIATE OUTPUT FOR THE APPLICATION.
3. ON LCPC THE LIQUID SOLENOID VALVE MAY BE USED AS AN ALTERNATIVE TO THE PEV OUTPUT WHEN USING A CONVENTIONAL TEV.
4. THE CONTROLLER MUST BE EARTHED TO THE CHASSIS VIA THE CONTROLLER FIXING HOLE AS SHOWN.
5. TO MEET EMC REQUIREMENTS THE CONTROLLER MUST BE INSTALLED ACCORDING TO THE INSTALLATION REQUIREMENTS SHEET FOR THIS PRODUCT.
6. INPUTS REQUIRE `C' CONNECTED TO NEUTRAL AND THE INPUT TO 230Vac WHEN SIGNAL IS PRESENT.
7. PLANT INPUTS TO CON B MUST BE ON THE SAME PHASE AS THE SUPPLY ON CON A.

   THIS UNIT IS NOT RATED FOR 415V
8. FANS/HEATER OUTPUT SELECTABLE USING MAINTENANCE UNIT.
9. ON LCPT RL5 IS FOR LIQUID SOLENOID ONLY.

THIS IS AN UNCONTROLLED COPY - UNLESS STAMPED WITH CONTROLLED COPY STAMP

JTL SYSTEMS LTD
41 KINGFISHER COURT, HAMBRIDGE RD,
NEWBURY BERKSHIRE: RG14 5SJ
TEL: 01635 263646 FAX: 01635 263647

ISS	DESCRIPTION	APP'D	DATE
3	NOTES 3 & 4 CORRECTED	MJK	6/00
2	REMOVED CON BOARDS, ADDED NOTE	MJK	7/98
4	SWAPPED INPUTS	MJK	3/01

TITLE: CABINET CONTROLLER WIRING

TYPE: LCPC, LCPT

PROJ.	DRG No:	SHT	OF	ISS.
LC	02085	1	1	4